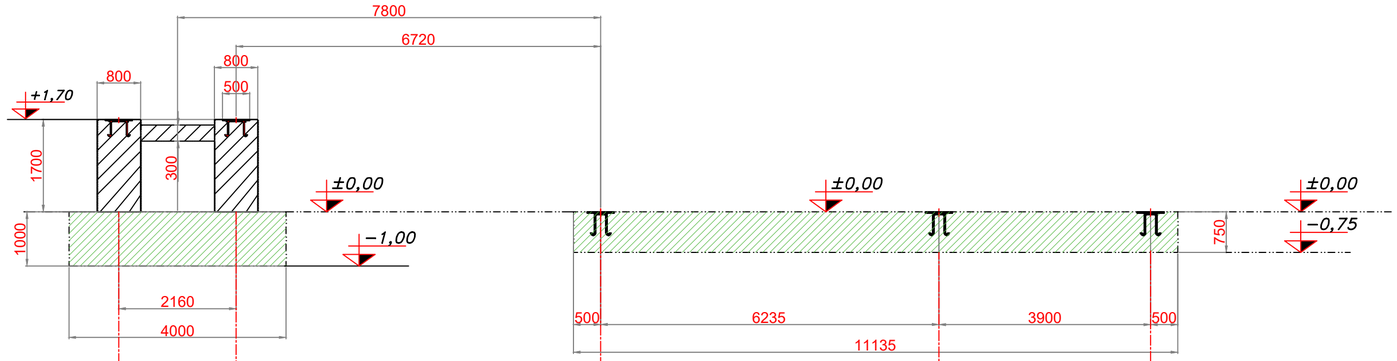

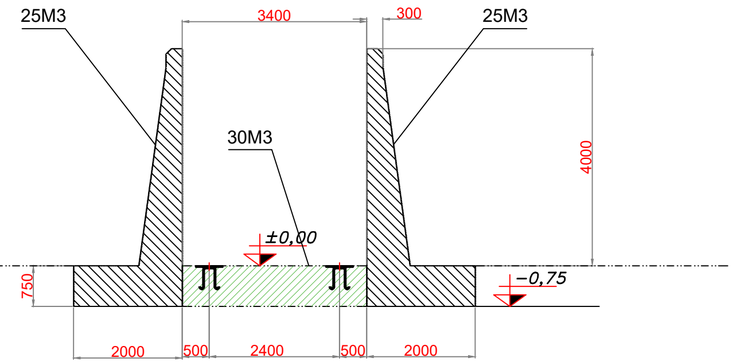

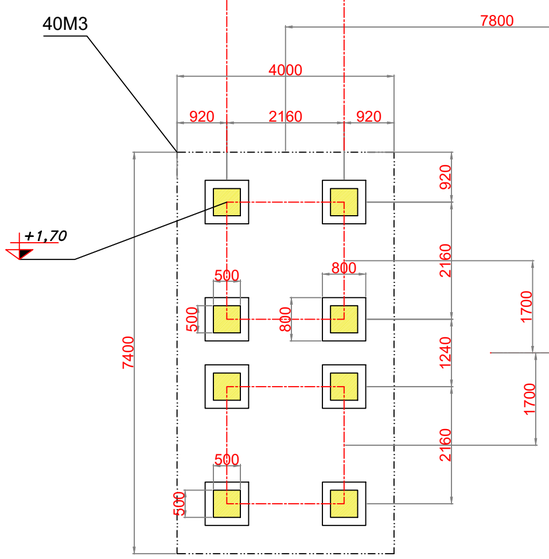

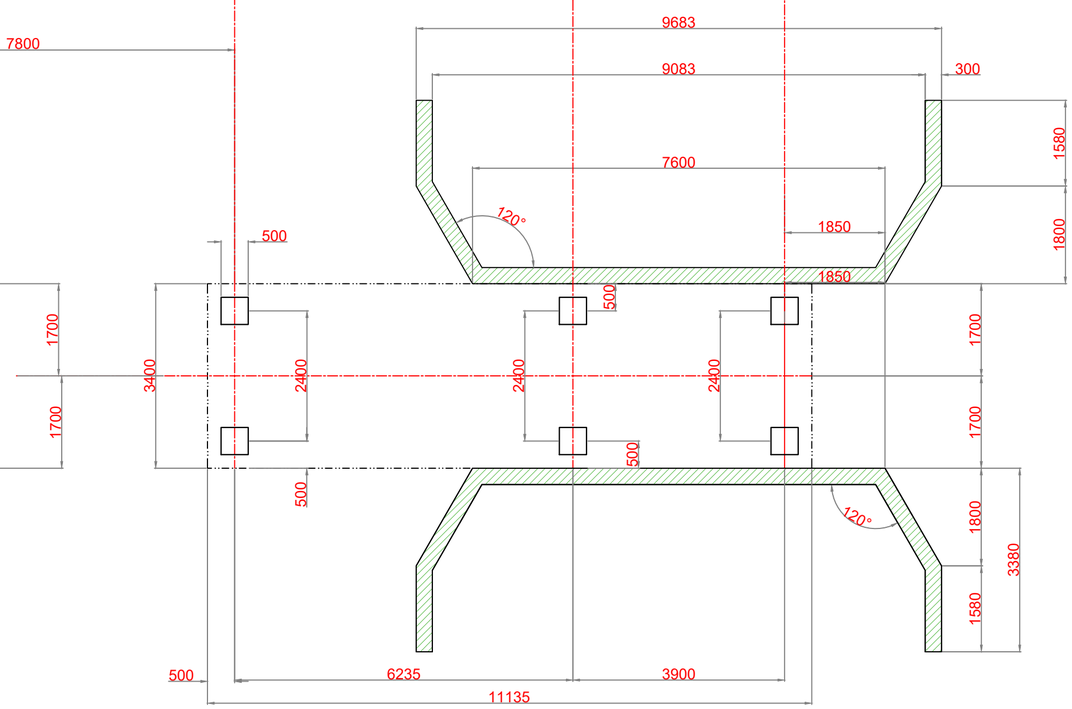

TOTAL:120-130M3 BETON

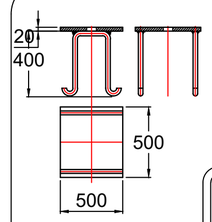

PLATE SIZES			
1	20x500x500 .....6 ADET	M100	20 TON X 6
2	20x500x500.....8 ADET	100 TON SILO-2	40TON X 8

Attention !...
This project is just to show the installation plan of the machine.
According to the laying installation, the reinforced concrete plan will be made by the customer

R.NO DEGISIKLIKLER TARIH ISIM